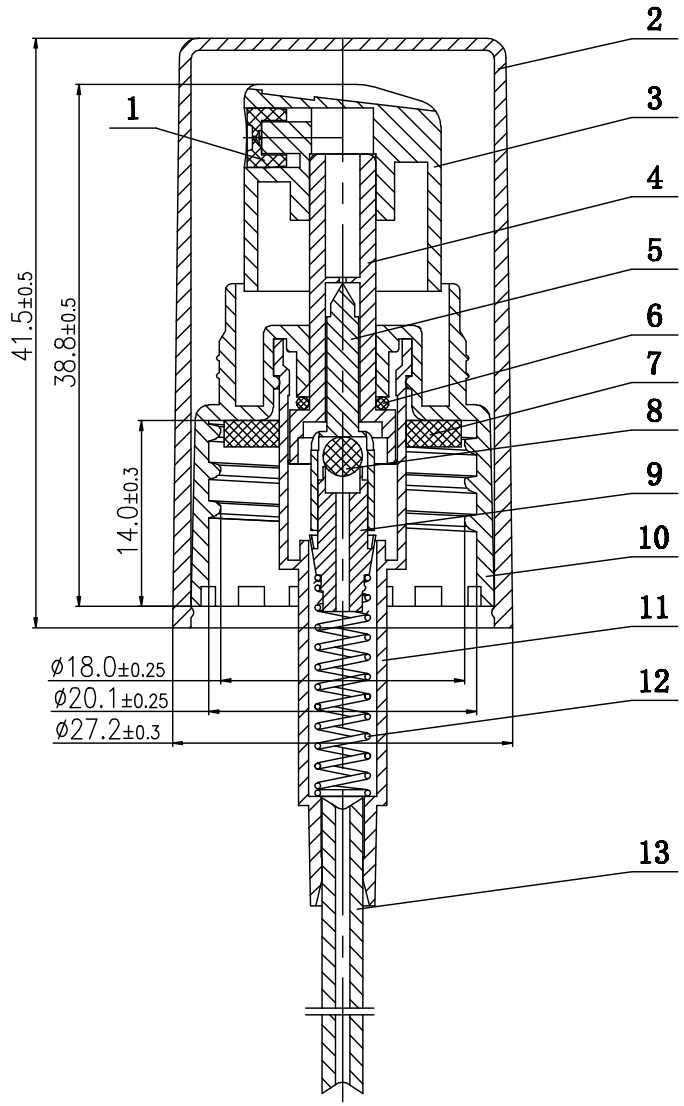

13	Dip tube	PE	1
12	Spring	304	1
11	Housing	PP	1
10	Closure	PP	1
9	Lower piston	PE	1
8	Ball	GLASS	1
7	Gasket	PE	1
6	"O" ring	RUBBER	1
5	Stem insert	POM	1
4	Up piston	PE	1
3	Actuator	PP	1
2	Cap	PP	1
1	Nozzle	POM	1
No	Name	Material	Quantity

Name			
Design		Scale	2：1
Approve		Date	2025.11
COMPANY			